Lintel PurBox

The Lintel PurBox is a systematic construction element that creates space for exterior shading in the area of construction lintels. It is primarily designed for buildings without a Contact Insulation System and is optimized for most of the used masonry systems. Thanks to its sufficient internal space, you can place exterior blinds, shutters, and screen rollers inside it. There are 2 types available - PBP and PBIP.

1. Type PBP

It is designed for masonry systems where insulation in the lintel part is not needed, or for implementations where insulation needs to be addressed individually.

Product specifications:

- The PBP body is made from the construction material Purenit 550 MD with a thickness of 15 mm. The material properties are specified in the technical sheet at the last pages of this document.
- The PBP box is without insulation.
- PBP is coated internally in grey color and has a front wall coating that protects against UV radiation.
- PBP standardly includes an "L" trim on the front side in raw aluminum. The trim has dimensions of 25 x 25 mm, extending 8 mm in front of the front wall profile.
- Joints are always made by gluing and stapling.
- The longest possible length in one piece is 3500 mm (or according to transport possibilities). Other dimensions should be consulted with the manufacturer.

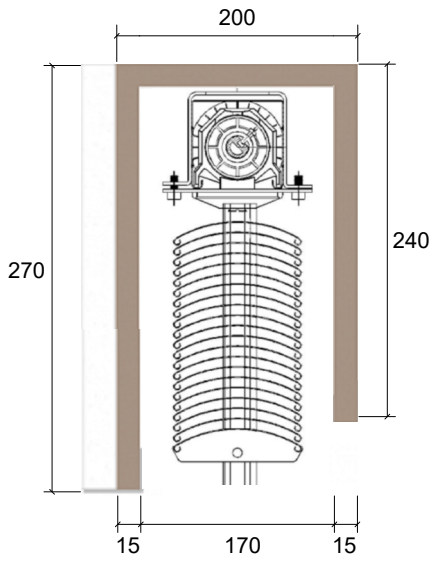

2. Type PBIP

This is an optimized construction element that also includes lintel insulation.

Product specifications:

- The PBIP body is made from the construction material Purnit 550 MD with a thickness of 15 mm. The material properties are specified in the technical sheet at the last pages of this document.
- PBIP includes PIR lintel insulation with a thickness of 60 mm. The material properties of PUREN MV are specified in the technical sheet at the end of this document.
- PBIP is coated internally in grey color and has a front wall coating that protects against UV radiation.
- PBIP standardly includes an "L" trim on the front side in raw aluminum. The trim has dimensions of 25 x 25 mm, extending 8 mm in front of the front wall profile.

- The longest possible length in one piece is 3500 mm (or according to transport possibilities). Other dimensions should be consulted with the manufacturer. Joints are always made by gluing and stapling.

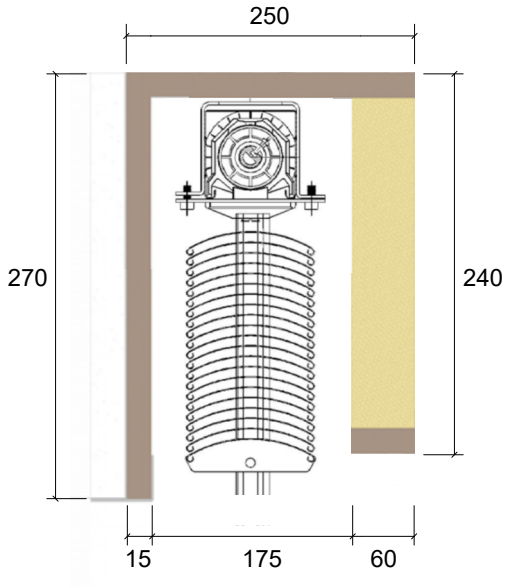

Dimensions of Lintel PurBoxes

The lengths of the lintel boxes come from the standard lengths of construction lintels. If you need to choose a different opening light than the standard lintel placement offers, adjust the purbox by trimming the front part as needed for the construction.

Lintel width (mm)	Fixing min. (mm)	Window clearance max. (mm)
Dimension A	Dimension C	Dimension B
1 000	125	750
1 250	125	1 000
1 500	125	1 250
1 750	125	1 500
2 000	200	1 600
2 250	200	1 850
2 500	250	2 000
2 750	250	2 250
3 000	250	2 500
3 250	250	2 750
3 500	250	3 000

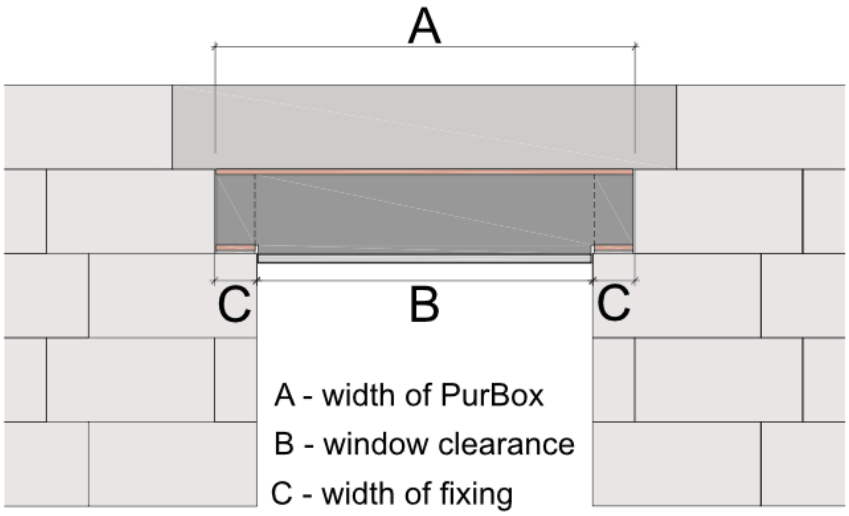

Working with PurBoxes, transportation

During transportation and storage, place the products with the top side on a flat surface. The maximum overhang over the pallet should be 300 mm on each side. Do not load the products with other materials.

Store in a dry place and away from direct sunlight.

Before the facade implementation, the front face of the PurBox should be treated with a penetrating coating or an adhesive bridge.

When installing the boxes, follow the manufacturer's instructions for your masonry material.

Purenit

pressure resistant thermal insulation panels made of pressed polyurethane (PU) rigid foam material

pressure resistant, heat-insulating smart material for universal use in flat or pitched roofs and façade structures		- for low thermal bridge connection details - for installation of construction elements - as supporting material for composite constructions
Cover layers	double-sided	non-laminated
Edge formation	all round	blunt

Thickness	[mm]	20	30	40	50	60
Thermal resistance [1]	R_D [(m²·K)/W]	0,20	0,35	0,45	0,55	0,70
Heat transition coefficient [2]	U_D [(m²·K)/W]	2,94	2,04	1,69	1,45	1,19
Vapour diffusion resistance	S_d [m]	0	0	0	0	0
Package content	Pieces	30	20	15	13	10

purenit functional material — Technical data

Characteristic	Standard/test procedure	Unit	Indicator	max	min
Material	highly compressed, heat-insulating smart material on the basis of rigid polyurethane foam (PU) acc. EN 13165, dimensionally stable, moisture-resistant, non-rotting, resistant to mildew and decay, recyclable, safe from biological and building ecology point of view, emission-free acc. to				
Bulk density	EN 1602	kg/m³	550	+40	-40
Dimensions					
Length	EN 822	mm	2440		
Width	EN 822	mm	1220		
Available thicknesses	EN 823	mm	10[3], 15[3], 20, 30, 40, 50, 60 other thicknesses and formats on request		
Thermal conductivity	EN 12667	at thickness	d ≤ 40 mm	40 < d ≤ 60 mm	d > 60 mm
Nominal value (EU) λ_D	ETA-18/0604	W/(m K)	0,083	0,085	0,088
Compressive strength					
Compressive stress at 10% compression	EN 826	MPa	7,1		
Admitted long-term pressure load at < 2% compression		MPa	1,8		
Bending strength [4]	EN 12089	MPa	4,5		
E-module (bending load) [4]	EN 12089	MPa	30		
Transverse strength [4]	EN 12090	MPa	1 -1,5		
Shear strength [4]	EN 12090	MPa	1 -1,5		
Screw removal resistance [4]		Screw	woodscrew 6x60		
Surface removal	EN 14358	N/mm²	11,35		
Narrow edge removal	EN 14358	N/mm²	8,0		
Head pull-through resistance	EN 14358	N/mm²	29,0		
European Technical Assessment (EU)		ETA-18/0604			
Fire behaviour	non-smouldering, non-melting, non-dripping				
Reaction to Fire Class / RtF (EU)	EN 13501-1		E		
Temperature resistance		°C	-50 to +100, short-termto +250°C		
Moisture absorption	EN 12571	% by mass	≤ 3		
Water absorption	EN 1609	kg/m²	≤ 0,5		
Thickness swelling [4]	EN 68763	%	≤ 0,8		
Water vapour diffusion resistance factor(PU) μ	EN 12086		8		
Linear expansion coefficient [4]	EN 1604	1/K	$5 \cdot 10^{-5}$		

1) Thermal resistance of the insulation panel based on the thermal conductivity nominal values acc. to ETA-18/0604, in compliance with EN 13165.
2) Insulation element U value on the basis of the thermal conductivity nominal value acc. ETA-18/0604. Heat transfer resistances R_{si} = 0,10 m²·K/W and R_{se} = 0,04 m²·K/W (Heat flow upwards) are calculated; other component layers are not considered.
3) uncontrolled thickness range - we reserve the right to deviations from technical values
4) Lab values, not part of the factory production control and external supervision

Declaration of performance
40243.CPR.2018.10
purenit
www.puren.com/download

CE
ETA-18/0604
Verification authority: 0751 FIW München

puren gmbh · Rengoldshauser Straße 4 · DE-88662 Ueberlingen
t 49 7551 80990 · f 49 7551 809920 · info@puren.com
www.puren.com